DIAMOND GEAR CO., LTD. 2600WG5085

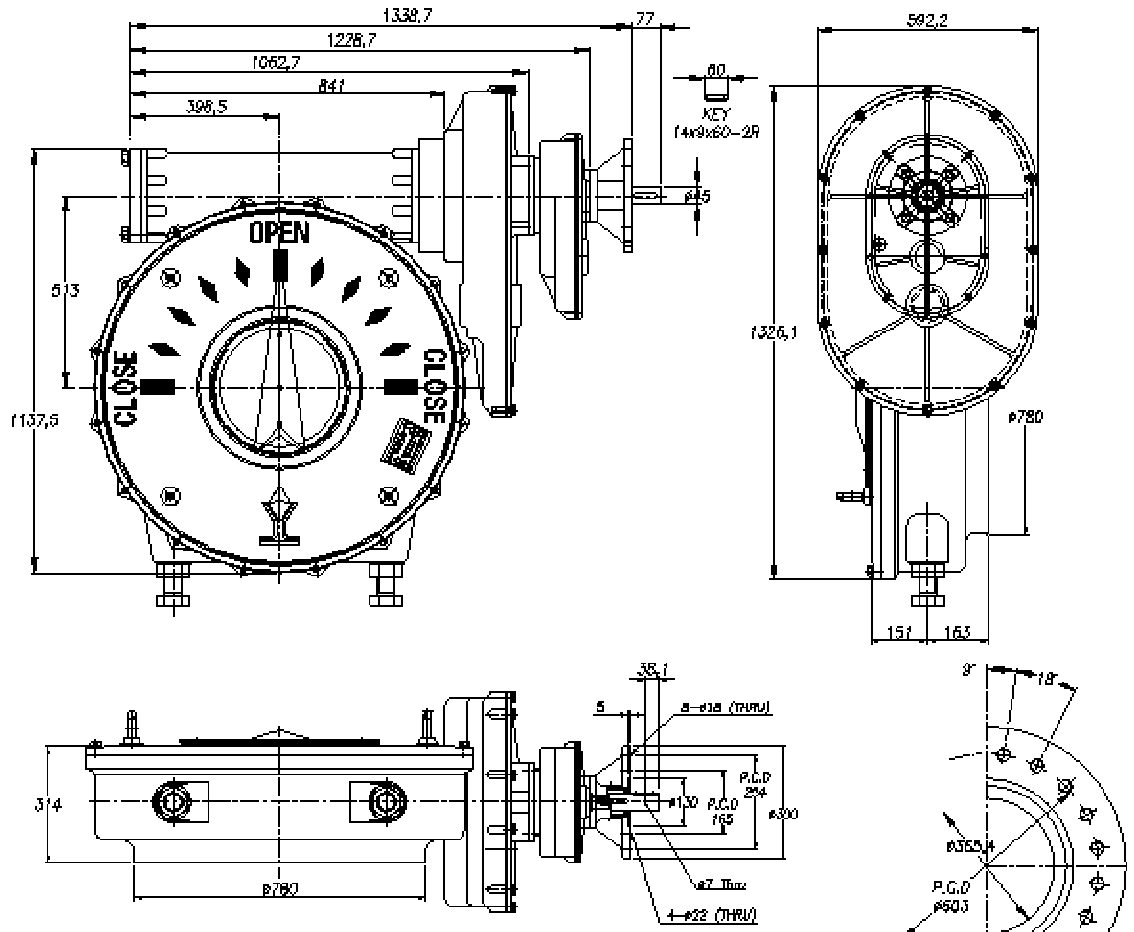

DIA.	RIM PULL AT MAX. O/P TORQUE (Lbs.)	
20"	183	
24"	152	WEIGHT (Lbs.)
30"	122	
36"	101	5074
48"	76	

M.O.V FLANGE MAX : ISO F-16/F-25
M.O.V FLANGE MAX STEM : ø50

BASE: ISO F-60(FLAT FACE)

MAX. OUTPUT TORQUE (N.LB)	MAX. INPUT TORQUE (IN.LB)	RATIO	MECHANICAL ADVANTAGE	OUTPUT ANGULAR STROKE	TURN PER 90°	MAX. ROUND BORE (IN.)	MAX. SQUARE BORE (IN.)	MAX. MOUNTING STRADDLE C/L (IN)	MIN. MOUNTING STRADDLE C/L (IN)	PREFERED MOUNTING STRADDLE C/L (IN)
2,600,000	1826	5085:1	1424	± 20°	1271.25	12.00" Key: 2.75" x 1.40"	8.50"	27.00"	20.00"	F60

DIAMOND GEAR CO. LTD.
HOUSTON, TEXAS, USA
PHONE: 713-590-0270, FAX: 713-590-0278

C921127A

REV.0

06/02/09